TECHNICAL GUIDE

for the SupaLite Roof System

www.supaliteroof.co.uk

SUP070 V2 06/18

SupaLite

ACCREDITATIONS

BBA Certification

The ExtraLight tile was awarded BBA approval, inspection, testing & certification via the manufacturers application in November 2017.

BRE Certification

The SupaLite roof was tested using WUFI software to ensure the roof is free from risk of condensation. BRE have also carried out water/weather testing with a pass to EN15026.

CORGI Certification

SupaLite are the first tiled roof company to be assessed and issued with membership of the respected CORGI Fenestration scheme for supply chain quality and continuity.

JHAI Systems Approval

SupaLite are partnered with JHAI for building control to ensure installations are compliant with regulations. Homeowner certificates* are issued from JHAI along with SupaLite guarantees.

The SupaLite roof is a revolution in the conservatory industry. Providing owners of tired and energy inefficient conservatories with a radical solution to extreme temperature fluctuations.

ROOF SYSTEMS

Edwardian

Standard Rafter / Standard Hip	Max Width	**5250mm**
Heavy Duty Rafter / Heavy Duty Hip	Max Width	**6500mm**
ECO Roof	Max Width	**4000mm**
Rafters	Max Centres	**635mm**
Roof Pitch	Min / Max Angle	**15º / 30º**

35º Pitch — Roofs can be made up to 35º, however the ridges will need cutting in manually on-site. No external 3 or 5 way is supplied over 30º

Tie Bars — Tie bars are only required on Edwardian roofs with a ridge length exceeding 3500mm

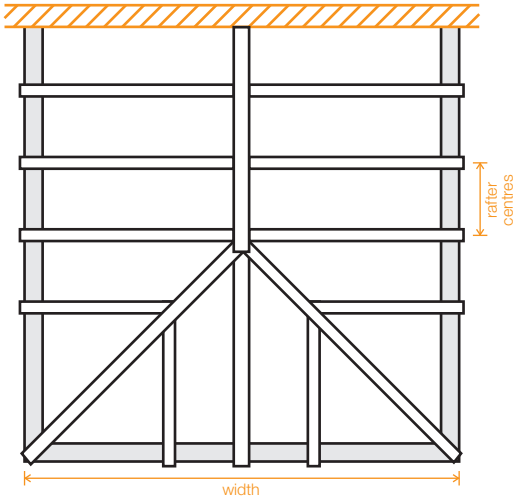

Edwardian Double Hip

Standard Rafter / Standard Hip	Max Width	**5250mm**
Heavy Duty Rafter / Heavy Duty Hip	Max Width	**6500mm**
ECO Roof	Max Width	**4000mm**
Rafters	Max Centres	**635mm**
Roof Pitch	Min / Max Angle	**15º / 30º**

35º Pitch — Roofs can be made up to 35º, however the ridges will need cutting in manually on-site. No external 3 or 5 way is supplied over 30º

Tie Bars — Tie bars are only required on Edwardian roofs with a ridge length exceeding 3000mm

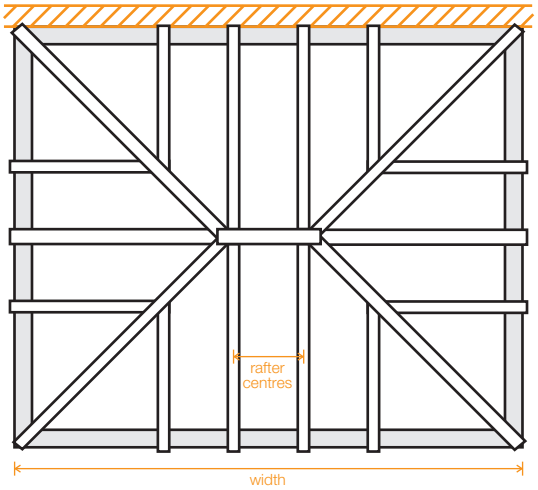

Victorian

Standard Rafter / Standard Hip	Max Width	**5250mm**
Heavy Duty Rafter / Heavy Duty Hip	Max Width	**6500mm**
ECO Roof	Max Width	**4000mm**
Rafters	Max Centres	**635mm**
Roof Pitch	Min / Max Angle	**15º / 30º**

35º Pitch — Roofs can be made up to 35º, however the ridges will need cutting in manually on-site. No external 3 or 5 way is supplied over 30º

Tie Bars — Tie bars are only required on Victorian roofs with a ridge length exceeding 3500mm

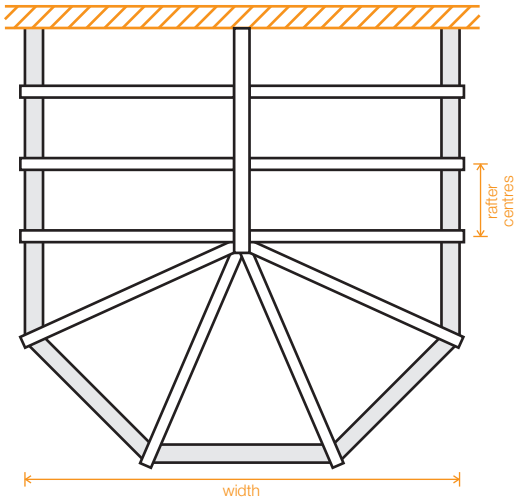

Victorian Double Hip

Standard Rafter / Standard Hip	Max Width	5250mm
Heavy Duty Rafter / Heavy Duty Hip	Max Width	6500mm
Rafters	Max Centres	635mm
Roof Pitch	Min / Max Angle	15º / 30º

35º Pitch — Roofs can be made up to 35º, however the ridges will need cutting in manually on-site. No external 3 or 5 way is supplied over 30º

Tie Bars — Tie bars are only required on Victorian roofs with a ridge length exceeding 3000mm

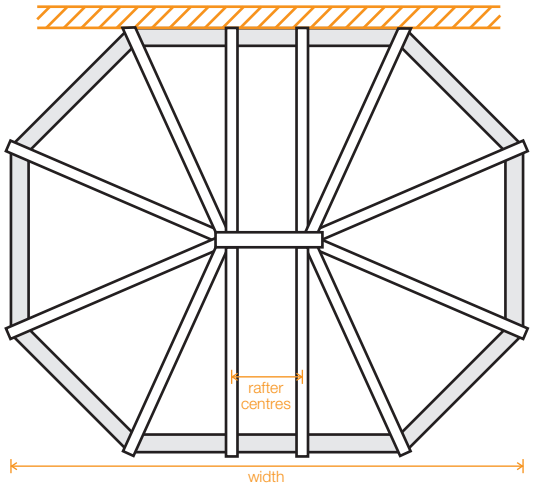

Gable Fronted

Standard Rafter	Max Width	5250mm
Heavy Duty Rafter	Max Width	6000mm
Rafters	Max Centres	635mm
Roof Pitch	Min / Max Angle	15º / 35º

Tie Bars — Tie bars should be positioned on the third rafter from the front. Additional tie bar required on roofs with a ridge length exceeding 2500mm. Tie bars spaced at 2500mm

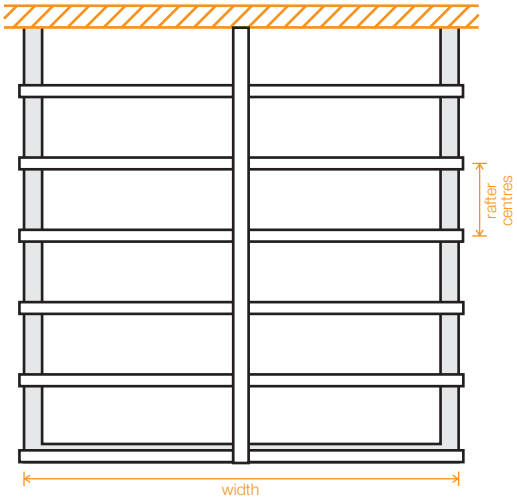

Lean-To / Hipped Lean-To

Standard Rafter - EXTRALIGHT	Max Projection	3200mm
Standard Rafter - TAPCO	Max Projection	3000mm
Heavy Duty Rafter - EXTRALIGHT	Max Projection	4200mm
Heavy Duty Rafter - TAPCO	Max Projection	4000mm
Rafters	Max Centres	635mm
Roof Pitch (ExtraLight/Premium/Tapco)	Min / Max Angle	15º / 30º
Roof Pitch (Bonded Tile)	Min / Max Angle	10º

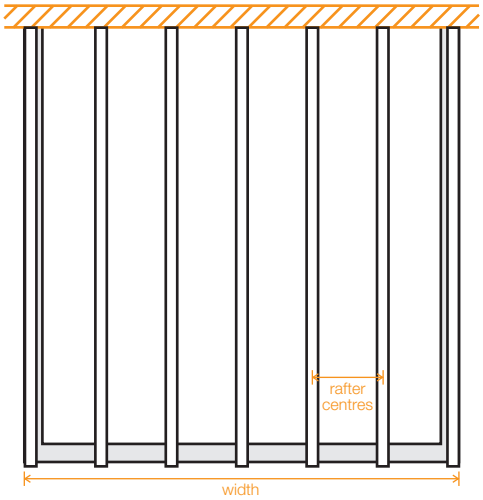

Gallows Brackets / Box Gutter Supports

All box gutters with a length exceeding **3000mm** require support from either a gallows bracket or by means of a supporting brick pier / wall

Eaves / Ring Beam

Openings up to	**2400mm**	Can be unsupported
Openings between	**2401mm** and **3600mm**	Require an Angle Iron Section of **100mm x 80mm**
Openings between	**3601mm** and **4600mm**	Supported by an aluminium box section **100mm x 150mm** fixed to the inside of the ring beam.

Structural Posts

Structural posts are designed to be used to provide a means of supporting the roof and transferring the weight directly on to the existing base work. The post is designed to bolt directly to the ring beam and fix down on to the dwarf wall.

The specification can only be determined by the surveyor after taking into consideration the condition of the existing window frames.

The following are recommendations based on a worst case scenario however the addition of walls in the building mean the calculation will need to be done based on window frames.

For building without brick walls the following calculation should be used:

1 post for every 6m² for shingle tiles
1 post for every 5m² for slate tiles
1 post for every 4m² for concrete tiles

Any elevation with a window frame manufactured in one section in excess of **2400mm** in length.

Any elevation with a continuous frame length exceeding **3500mm**

Roof Vents

Roof Vents are available in the following sizes.

550mm x 780mm

550mm x 980mm

Orangeries

Roof lanterns over **3000mm** in length require additional support.

Please contact our technical department for further information.

ECO Roofs

SupaLite ECO roof design available for **ALL Edwardian**, **Gable** and **Lean-to** styles. **ECO** roof available for **Victorian 3 facet** roof style only. Not available for Victorian 5 facet. **Please note:** No box gutter available for ECO roofs, standard designs only.

LOADING CALCULATIONS

Rafter Span Tables

Profile 203659

	ExtraLight	Tapco Slate	Slates	Concrete Interlocking Tiles
Roof Rafter Centres (ideal - 635mm)	**Rafter Span**	**Rafter Span**	**Rafter Span**	**Rafter Span**
450mm	3200mm	3100mm	3100mm	2900mm
600mm	2850mm	2850mm	2800mm	2600mm
750mm	2700mm	2600mm	2600mm	2450mm
800mm	2650mm	2600mm	2550mm	2400mm
900mm	2550mm	2500mm	2450mm	2300mm

The maximum length is governed by the permitted deflection (1/300 of span).
The maximum permitted bending stress is 160 n/sq.mm (proof stress for 6063-T6 = 160 n/sq.mm).

Eaves Beam Maximum Clear Span

Profile 203660

2400mm
eg. over double doors

Hip Beam Maximum Span

Profile 205980

4900mm

Mullion Requirement per m^2

Example: ExtraLight tiles, for every 6.3m^2 you will require 1 mullion

1) EXTRALIGHT

D+I = 1.07 kn/m^2 Area Permitted per Mullion = 13.5 / (2x1.07) = **6.3m^2**

2) TAPCO SLATE

D+I = 1.26 kn/m^2 Area Permitted per Mullion = 13.5 / (2x1.26) = **5.4m^2**

3) SLATES

D+I = 1.31 kn/m^2 Area Permitted per Mullion = 13.5 / (2x1.31) = **5.2m^2**

4) CONTRETE INTERLOCKING TILES

D+I = 1.56 kn/m^2 Area Permitted per Mullion = 13.5 / (2x1.56) = **4.3m^2**

Mullion Capacity (45 x 53 x 2)

Section Properties:

A = 577 sq.mm; Fo = 160 n/sq.mm; I = 20,04; Wel = 8432.7 mm3;
Wpl - 10119 mm3; Iyy = 286640 mm4

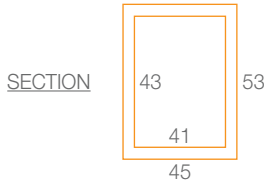

$$\varepsilon = \sqrt{\frac{250}{160}} = 1.25$$

$$B = \frac{43}{2} = 22$$

$$\beta_2 = 16 \times 1.25 = 20 < 22$$

$$B_3 = 22 \times 1.25 = 27.5 > 22$$

∴ Class 3

$$\lambda/_{rd} = \frac{1500}{23} = 65 \; ; \; \frac{2000}{23} = 87$$

$$Ncr = \frac{\pi^2 E\, Iyy}{l^2 cr} = \frac{\pi^2 \times 70000 \times 286640}{1400^2} = 101nm$$

$$Nc = \frac{13.5 \times 10^3}{577} = 23.4 n/mm^2 < 160 \; \therefore \text{ olk}$$

$$\text{Shape Factor } \alpha = 1 + \frac{27.5 - 22}{27.5 - 20}\left(\frac{10119}{8432}\right) - 1 = 1.15$$

$$MRD = \alpha\, Fo\, Wel / \gamma m, = \frac{1.15 \times 160 \times 8432}{1.1} = 1.35 \text{ KnM}$$

$$NRD = Fo\, A / \gamma m, = \frac{160 \times 577}{1.1} = 83.9 \text{ Kn Max}$$

Assume 2000 Long (Door Post) 2000 x 0.7 = 1400mm

$$\text{Max Load with Mounts} = \frac{1.35 knM}{0.1m} = 13.5 kn$$

Loadings - Structural Calculations

British Standards and Codes of Practice

EN 1990; EN 1991; EN 1992; EN 1993; EN 1995; EN 1996; EN 1999; BS 449; BS 5950; BS 5268; BS 5628; BS 8110; CP3

Beam spans for these calculations are based on the clear span between supports.

Tiled Roof 25 deg.

Dead	ExtraLight	-	7	kgs/sq.M on plan
	Felt & Batts	-	6	
	Plywood	-	10	
	Rafters	-	5	
	Insulation	-	3	
	Plasterboard	-	20	
	Total	-	51	kgs/sq.M - 0.5 kn/sq.M (0.56 on plan)
Imposed	0.6 kn/sq.M (0.55 on slope)			

Tiled Roof 25 deg.

Dead	Tapco Slate	-	17	kgs/sq.M on plan
	Felt & Batts	-	6	
	Plywood	-	10	
	Rafters	-	5	
	Insulation	-	3	
	Plasterboard	-	20	
	Total	-	61	kgs/sq.M - 0.6 kn/sq.M (0.66 on plan)
Imposed	0.6 kn/sq.M (0.55 on slope)			

BUILDING CONTROL

Building Control Certification is a requirement for all Tiled Replacement Conservatory Roofs

As you probably know, to put this through your local council building control department can be somewhat expensive with typical fees to the home owner in excess of £400.

By taking the stress and uncertainty out of the situation, SupaLite can facilitate the complete Building Control Certification process on your behalf.

THE FACTS

- Following a vigorous assessment of the roof system by an approved inspector, the home owner is safe in the knowledge that the structure is sound and that there are no building control issues if the home was ever to be sold.
- Conservatory roof conversions without a building regulations certificate can cause additional cost and major delays when selling a property.
- A building control certificate can provide peace of mind that the installation conforms to all current regulations. We hope that this provides you, the home owner, with the confidence that you are buying thorough a reputable company.
- Building regulations certificates are only ever issued by companies that offer a complete roof replacement.

IMPORTANT NOTE

SupaLite can only provide certification through JHAI for replacement tiled roofs. New build conservatories with a tiled roof cannot be certified using this service.

5 EASY STEPS

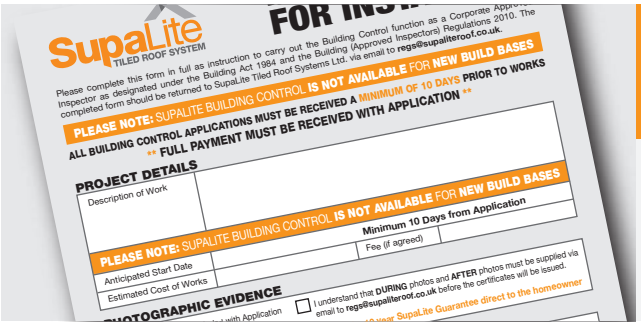
SupaLite TILED ROOF SYSTEM

FOR INS

Please complete this form in full as instruction to carry out the Building Control function as a Corporate App
Inspector as designated under the Building Act 1984 and the Building (Approved Inspectors) Regulations 2010. The
completed form should be returned to SupaLite Tiled Roof Systems Ltd. via email to regs@supaliteroof.co.uk.

PLEASE NOTE: SUPALITE BUILDING CONTROL IS NOT AVAILABLE FOR NEW BUILD BASES

ALL BUILDING CONTROL APPLICATIONS MUST BE RECEIVED A MINIMUM OF 10 DAYS PRIOR TO WORKS
** FULL PAYMENT MUST BE RECEIVED WITH APPLICATION **

PROJECT DETAILS

Description of Work

PLEASE NOTE: SUPALITE BUILDING CONTROL IS NOT AVAILABLE FOR NEW BUILD BASES

Minimum 10 Days from Application

Fee (if agreed)

Anticipated Start Date

Estimated Cost of Works

PHOTOGRAPHIC EVIDENCE

I understand that DURING photos and AFTER photos must be supplied via email to regs@supaliteroof.co.uk before the certificates will be issued.

1 Complete the form

Simply start the process by completing one of our Building Control Information Sheet forms and return it to SupaLite along with your roof order. A minimum of 10 days is required to process your application prior to works.

2 Take a before photo

It is an important part of the process that we receive at least one photograph of the conservatory **before** any work commences.

It is the installers responsibility to provide SupaLite with these photos.

3 Take a during photo

It is an important part of the process that we receive at least one photograph **during** installation showing the insulation in place.

It is the installers responsibility to provide SupaLite with these photos.

Installations will be inspected by a qualified surveyor to ensure compliance with the system approval certificate

4 Take an after photo

It is an important part of the process that we receive at least one photograph of the **completed** roof conversion.

It is the installers responsibility to provide SupaLite with these photos.

5 Certificates

Your customer will receive the following:

- Building Regulations Certificate
- Certificate of Authenticity
- A 10 Year SupaLite Guarantee

Completed SupaLite Building Control Information sheets
should be returned with your roof order to: **regs@supaliteroof.co.uk**

ALL BUILDING CONTROL APPLICATIONS MUST BE RECEIVED A MINIMUM OF 10 DAYS PRIOR TO WORKS

100% Stress Free Building Control Approval

There are many structural dangers and downsides to not having a building control approved roof with certification. Common problems range from mould and condensation through to a possible total roof collapse.

ONLY A WELL DESIGNED, CONTROLLED AND APPROVED ROOF SYSTEM CAN OFFER HASSLE FREE BUILDING REGULATIONS APPROVAL

SupaLite have invested heavily to provide a trusted and respected product that exceeds all standards and provides the homeowner with a peace of mind guarantee for a minimum cost.

100%

EASY APPLICATION

Obtaining a building certificate for your solid conservatory roof could not be easier

100%

HEADACHE FREE

We facilitate the whole process and take away the headache and stress

100%

IN-HOUSE EXPERTS

All applications handled by our qualified in-house experts who are happy to answer your queries

100%

PEACE OF MIND

Reassure the homeowner as a respected company by protecting their investment

100%

NATIONAL COVER

Nationwide coverage throughout England & Wales

100%

AMAZING VALUE

We work hard on your behalf to keep costs low. We aim to be the best value on the market

Questions to ask?

	SupaLite	Non-Compliant Roofs
BUILDING REGULATION CERTIFICATE ISSUED (if applied for)	✓	✗
COMPLIANT TO JHAI SPECIFICATION	✓	✗
FABRICATED IN OUR FACTORY OR BY AN APPROVED FABRICATOR	✓	✗
SUPALITE 10 YEAR GUARANTEE	✓	✗
STRUCTURALLY PROVEN EVEN UNDER HEAVY SNOWFALL	✓	✗
ROOF STRUCTURE DESIGNED TO TAKE PLASTERBOARD, TILES & VENTS	✓	✗
THERMALLY EFFICIENT COOL IN SUMMER, WARM IN WINTER	✓	✗
FREE FROM MOULD AND CONDENSATION	✓	✗
FREE FROM SOLICITOR ISSUES IF THE HOUSE IS SOLD	✓	✗
A WORRY FREE ALL YEAR ROUND LIVING SPACE FOR THE HOMEOWNER	✓	✗

INSTALLATION GUIDE

Measure the roof area you will be working on and check that all the frames have been installed square and are the correct size.

Revert to the hardware packing list for all components supplied with the roof system.

Before you start to install the roof you will need to prep the eves beam with M6 bolts and the under clad soffit.

Slide the soffit board into the underside of eves beam, trim the soffit to correct size and angle needed.

Slide the M6 bolts into the eves beam as shown. The wall bars need 1 bolt each the rest will need 2 bolts on each rafter & hip.

Fix eves beam together with cleats as shown.

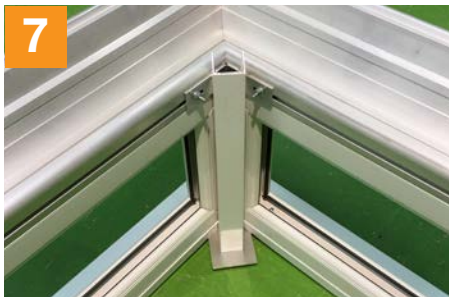

Fix the frames and eaves together with baypole fixings. If you require support mullions, fix these to the inside of eaves beam making sure the bottom plate is sat on the outer leaf brick. (Maximum 450mm Centres)

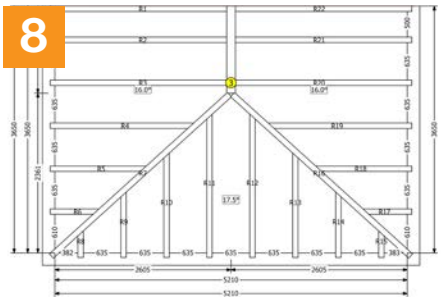

Refer to drawing to see the bar layout.

Insert cleats to rafter and hips to attached to eves beam as shown.

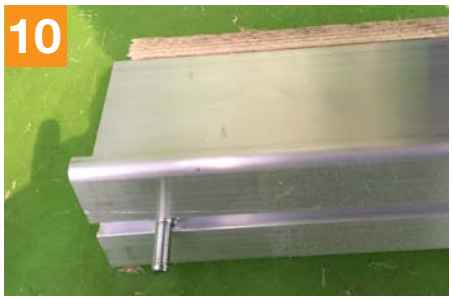

Slide M8 bolt to underside of rafter to attached to ridge.

Attached the cleats over the eves beam bolts and tighten with flange nuts, making sure the centre of bar is in line with marked eves beam.

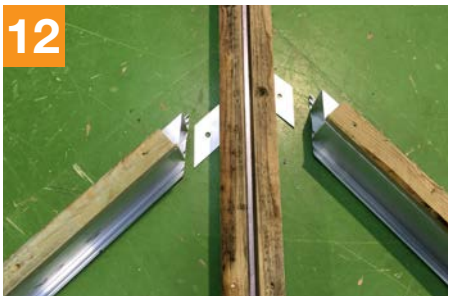

Slide the jack cleats to each side of hip, and M8 bolt to underside of rafter.

Side 2 bolts into underside of hip and attach to boss end.

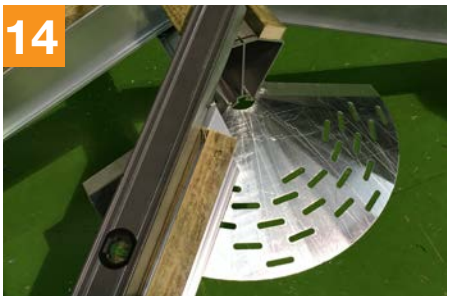

Hip should point to centre of ridge.

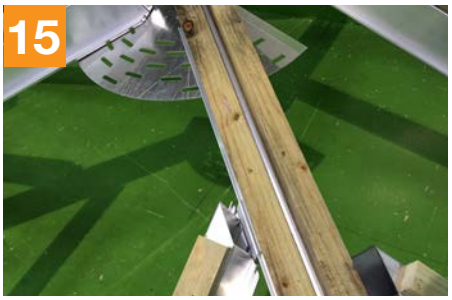

Bolt the jack rafters to hip jack cleats. Check all frames are plumb and that the building is square.

The insulation are cut and numbered starting to the right of bar number 1 running anti clock wise.

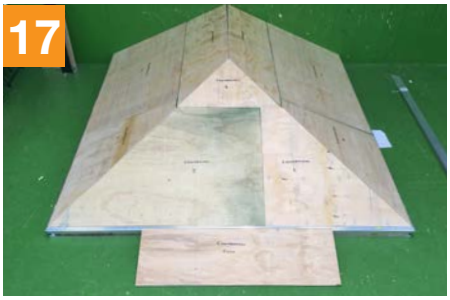

Ply is all cut and numbered refer to ply layout for the position.

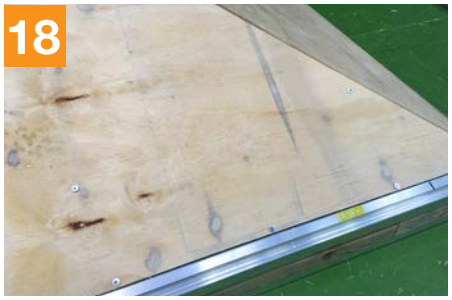

Fix ply to eves beam (If possible) with 38mm screws provided, fix the rest with nail gun or screws.

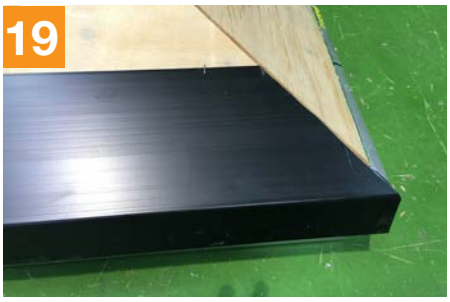

Place eaves tray so the end will drop into gutter.

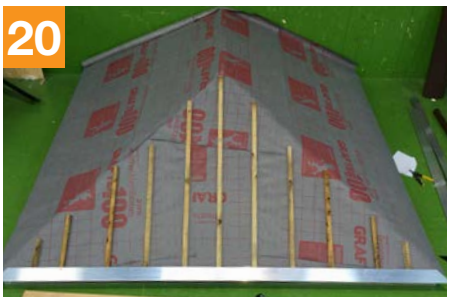

Felt the roof and batten every 250mm vertically and fix tile starter cleat.

Leave batten 60mm away from wall, and create a lead valley in gap then come up wall by 70mm.

Mark correct angle on the tiles for the hips.

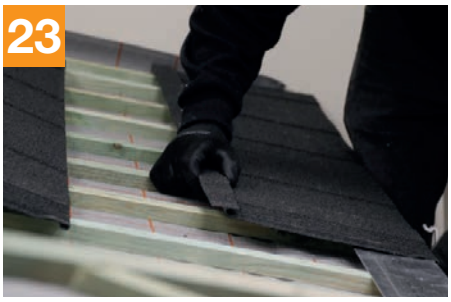

The first tile will lock into the tile starter cleat.

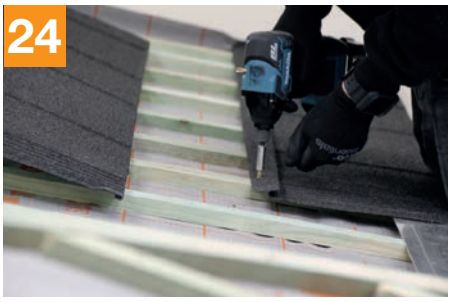

Tiles will have to run right to left to allow the tiles to interlock into each other.

Cut the tiles with SupaLite nibblers or grinder.

Once tiled get battens ready for the ridge caps.

Space the battens at 220mm for large ridges or 130mm for short ridges (centred from hip).

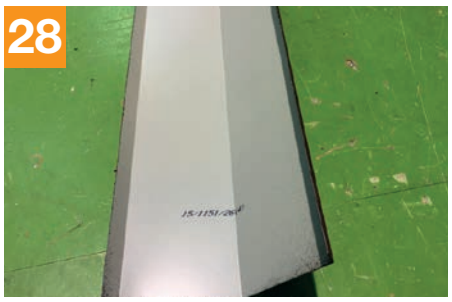

Ridges are tapered, code on the reverse should be pointing down hip.

Fix ridges and caps by screwing through the side of the ridges and in to the timber battens (as shown on image 27).

As point 29.

As point 29.

Ensure that ALL internal joints between the rafters and 100mm PIR are sealed using 50mm aluminium foil tape.

Fix internal battens horizontally at 610mm centres. Please refer to the following pages for installation of roof vents and valleys.

Fix insulated plasterboard to horizontal battens with drywall screws.

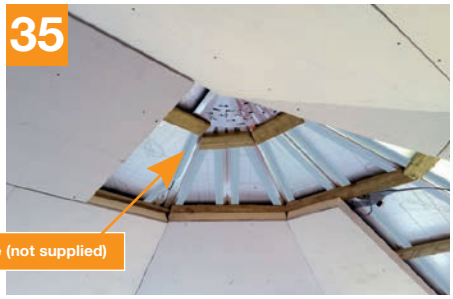

Cover all insulation joints and edges with Aluminium Foil Tape (not supplied) or Silicone (not supplied).

Skim insulated plasterboards to complete.

Mark out the position of the roof vent. This may have to be measured internally and marked on the outside.

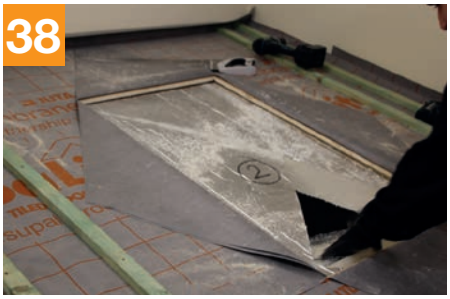

Cut out ply and insulation.

Fix roof vent. Place on top of plyboard. Please note roof vent and side flashing does not sit on timber battens.

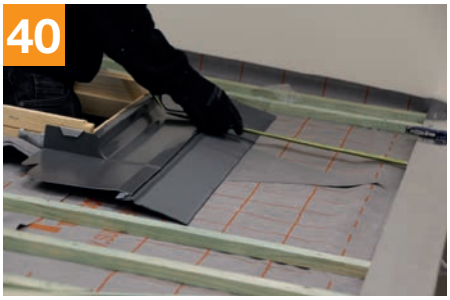

Measure and fix battens up to the flashing kit.

Keep battens tight up to the side of the flashings.

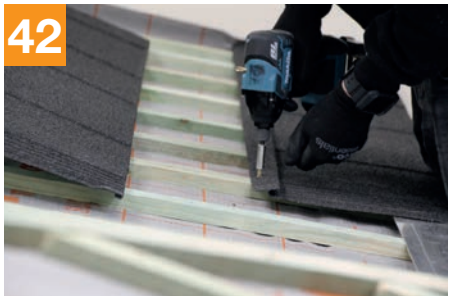

Tile up to and around the roof window.

As point 42.

You may need to cut tip of the tile to fit in to the bottom of the flashing kit.

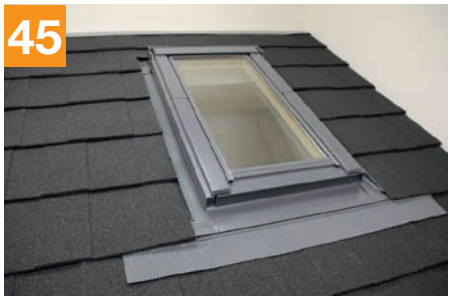

Refer to the roof vent installation guide for the fitting of vent trims.

Lay out the valley tray in position.

Fix battens up the side of valley tray.

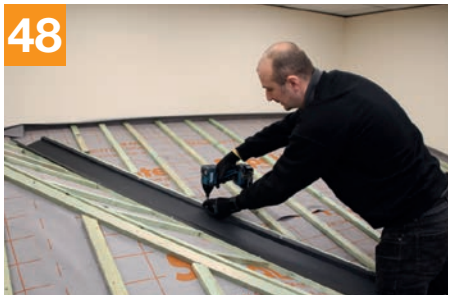

Cut bottom of valley tray to follow the roof line.

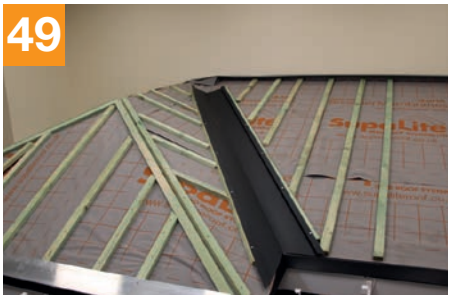

Fix valley tray down to the battens.

Cut out bottom of the tray to allow for the tile batten.

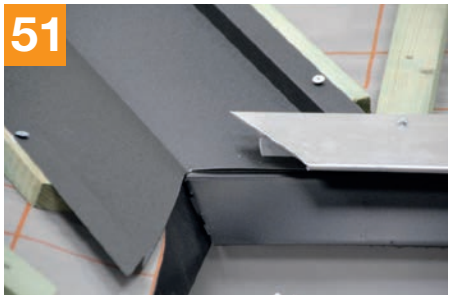

As point 50.

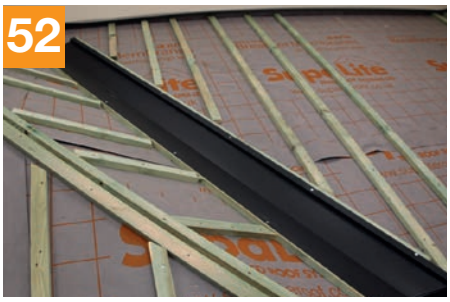

Continue to tile up the valley.

Leave approx 80mm tile gap in the centre of the valley.

Completed valley.

- Box gutter adaptors should be installed before fitting the box gutter to the conservatory.
- Ensure the aluminium is dry, then we recommend that the aluminium is keyed with sandpaper.
- Apply CT1 sealant (or equivalent) and insert fully. Apply box gutter sealing tape to cover the joint.

We strongly recommend the installation of **trickle vents** around the internal perimeter of window frames to provide adequate ventilation. We also recommend the installation of **air bricks** into the dwarf walls of the conservatory.

Important Information for SupaLite ECO Roofs

It is important that the same installation procedures are followed for the Eco Roofs as for the Standard SupaLite Roofs apart from the addition of 3 x 2 timbers, which are to be fitted to the head of the window frames before fitting the Eco Roof Ring Beam.

BOX GUTTERS

IMPORTANT: All aluminium **MUST** be insulated with 62.5mm Insulated Plasterboard in order to provide an adiquate thermal break.

Failure to insulate aluminium may lead to condensation issues

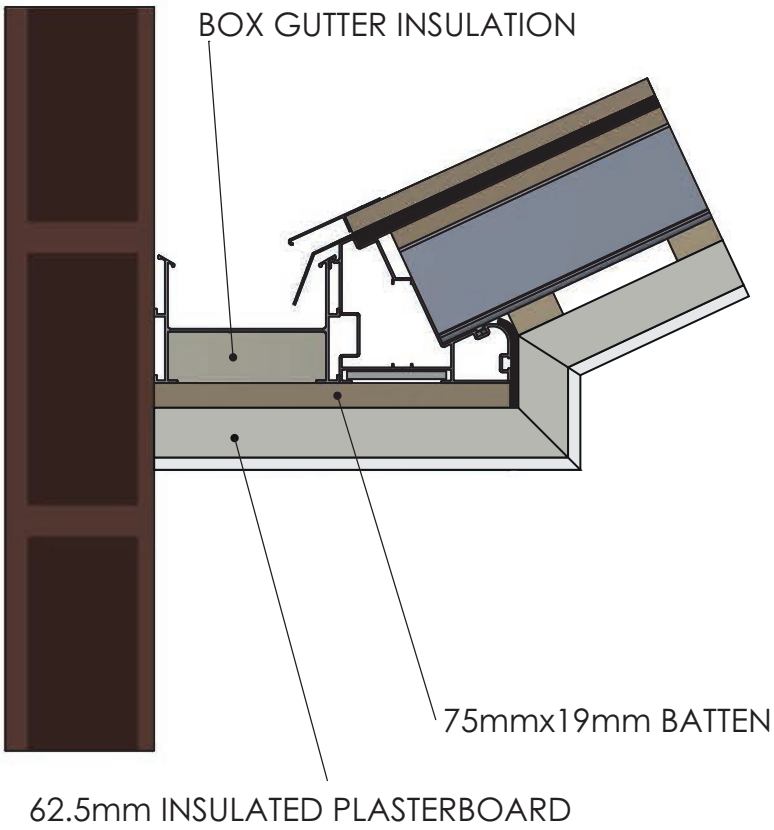

If unable to use Insulated Plasterboard due to restricted space, then Insulated Foam **MUST** be used.

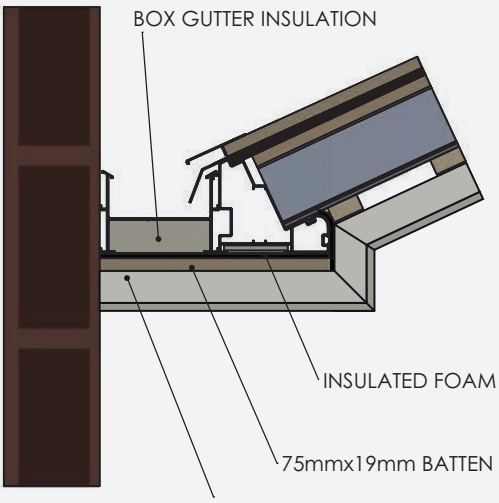

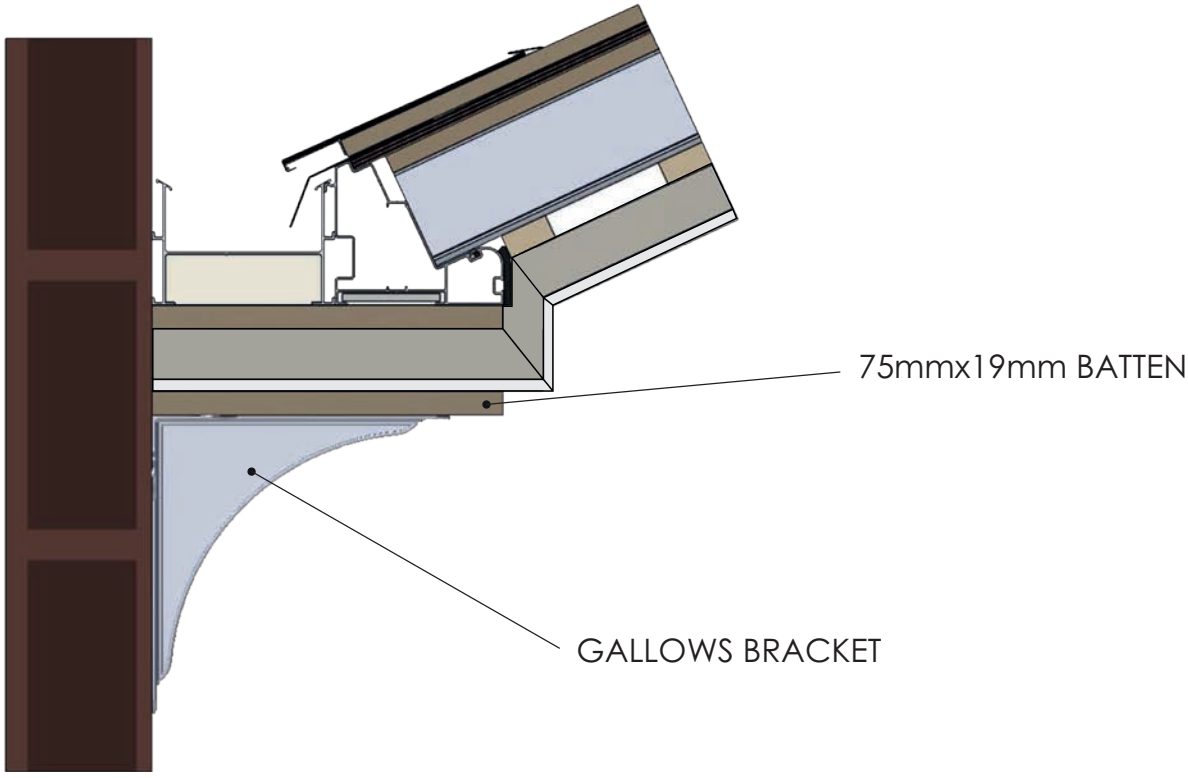

TILE SPECIFICATIONS

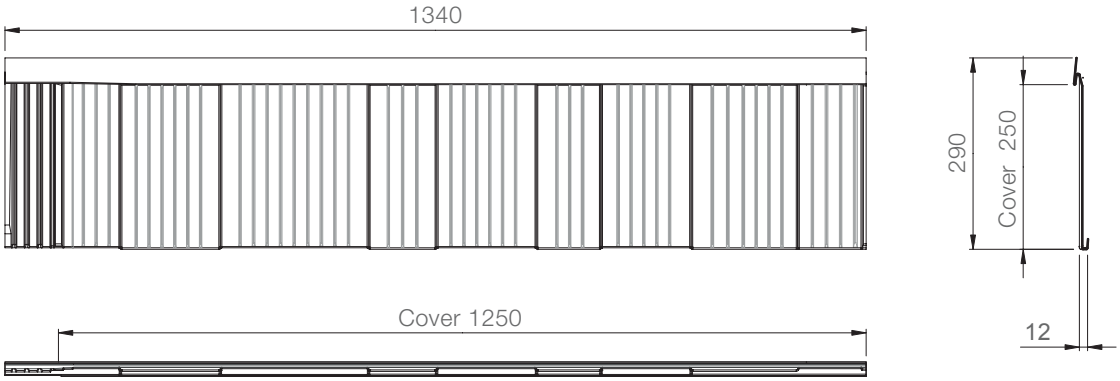

Tile Dimensions

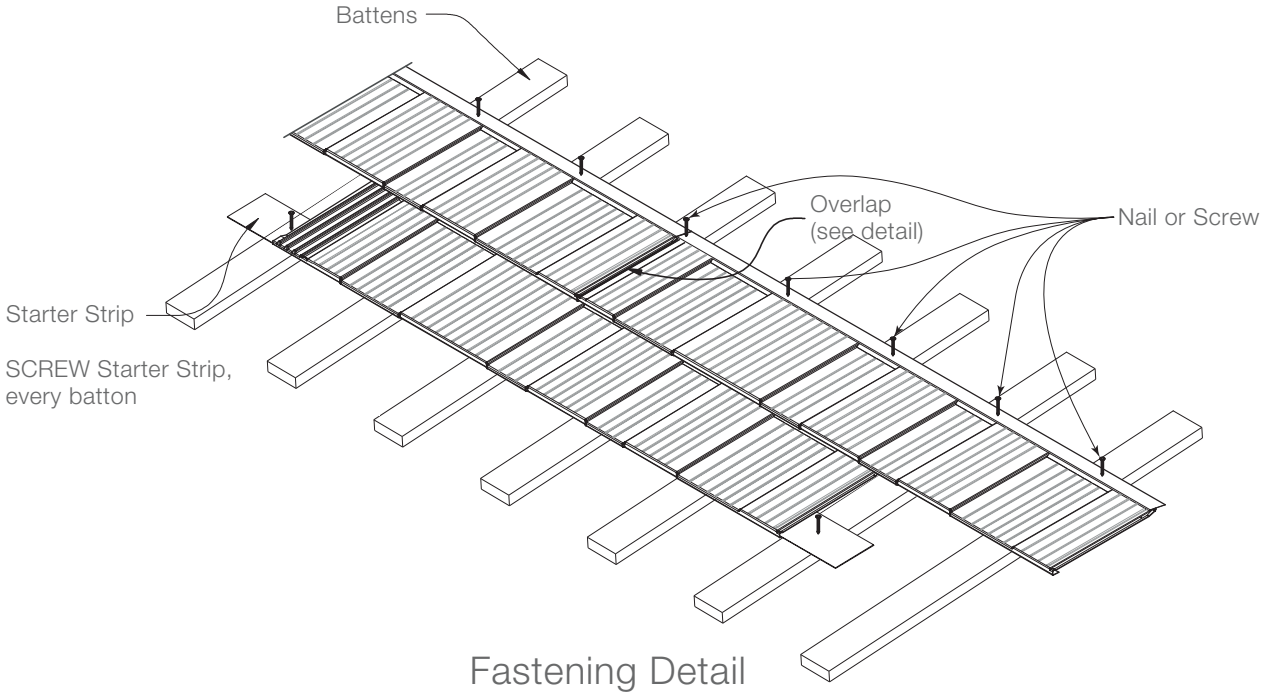

Fastening Detail

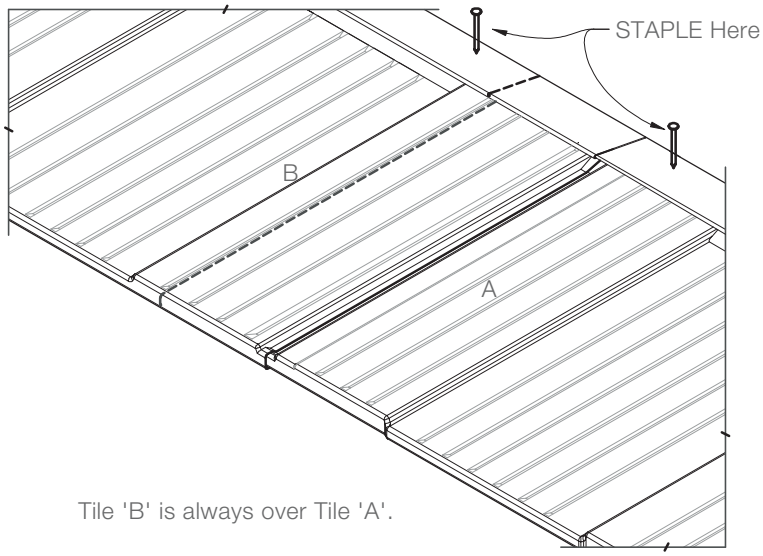

Overlap Detail

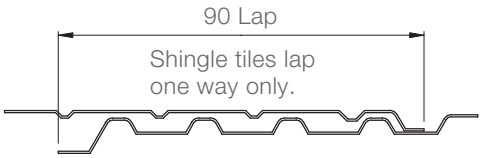

Lap Section

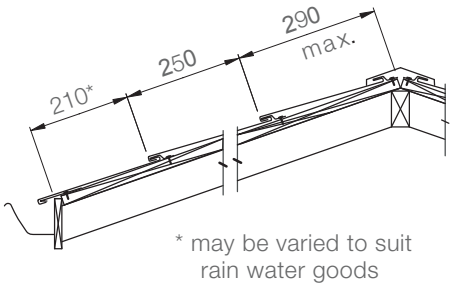

Batten Layout

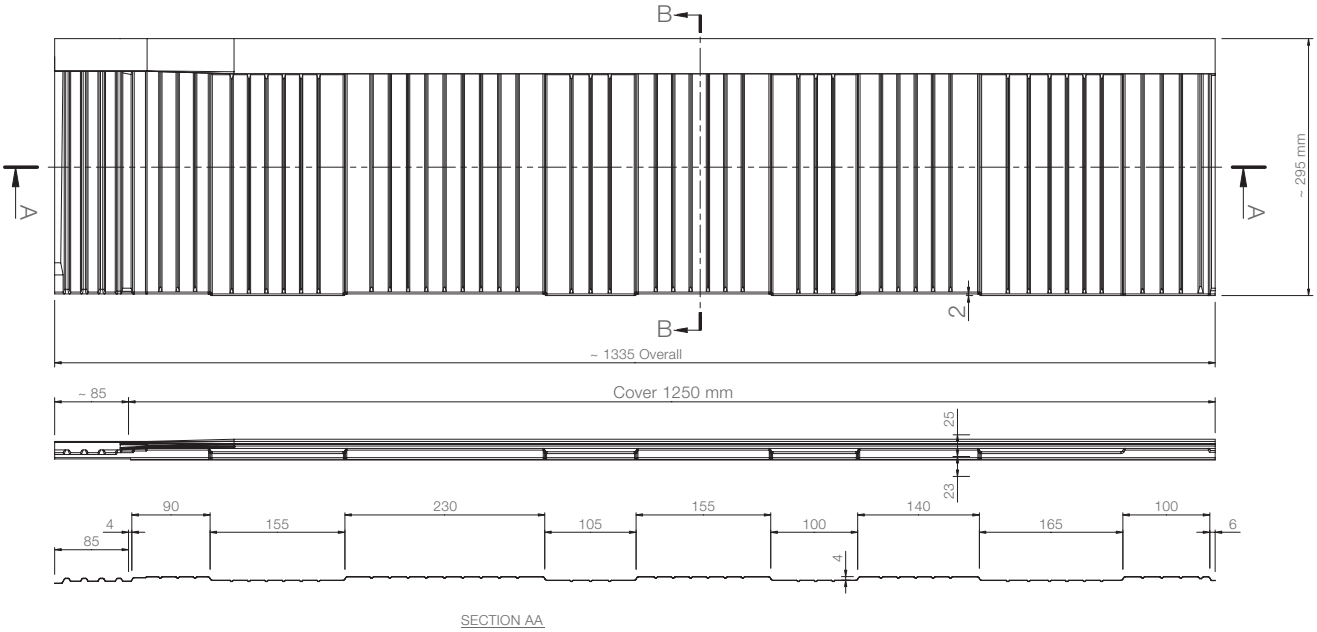

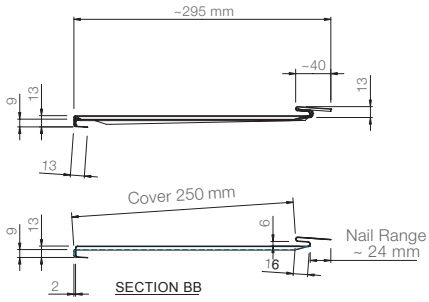

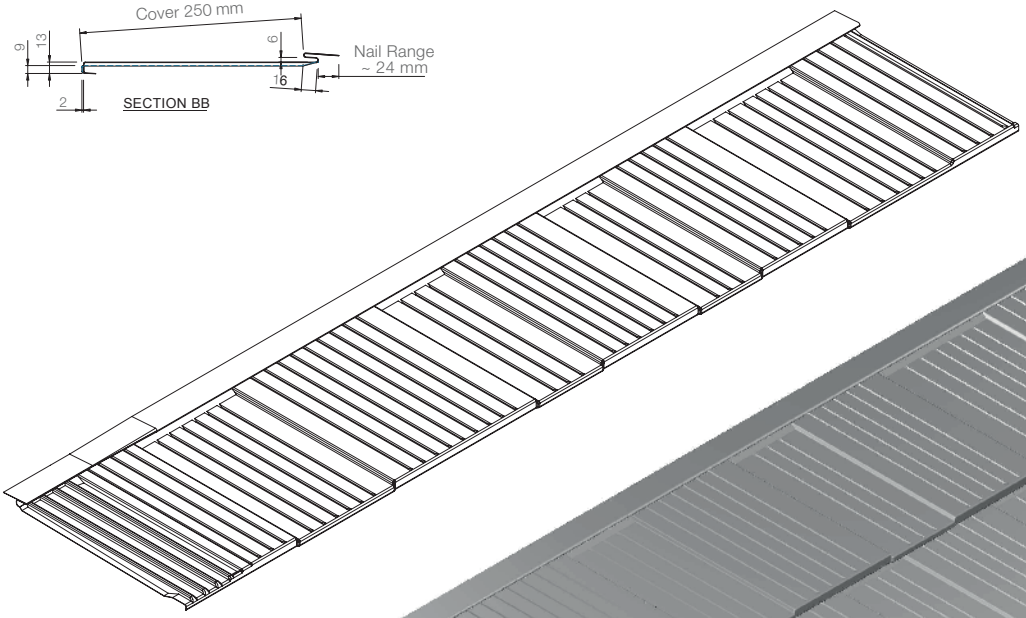

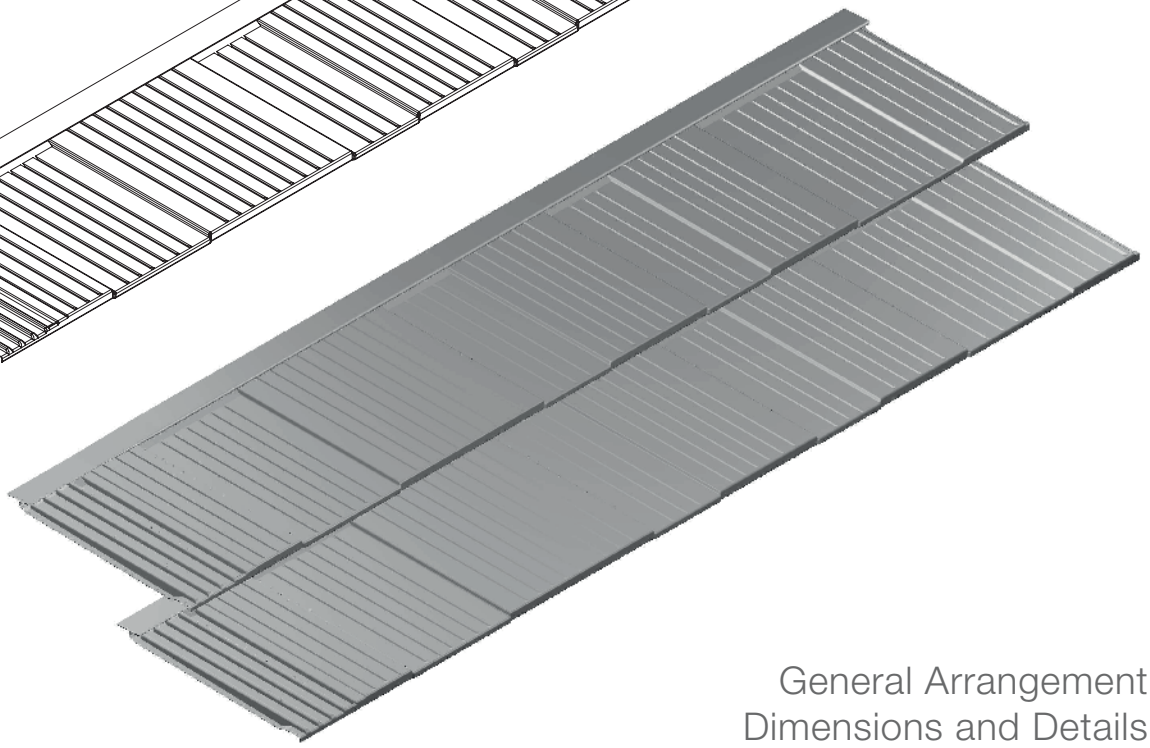

General Arrangement
Dimensions and Details

SupaLite Tiled Roof Systems Limited
180-181 Bradkirk Place
Walton Summit
Preston Lancashire
PR5 8AJ

Tel. **01772 82 80 60**
Fax. **01772 82 86 58**

Email. **sales@supaliteroof.co.uk**
Web. **www.supaliteroof.co.uk**